CRISTAL DV 1150

145 0845

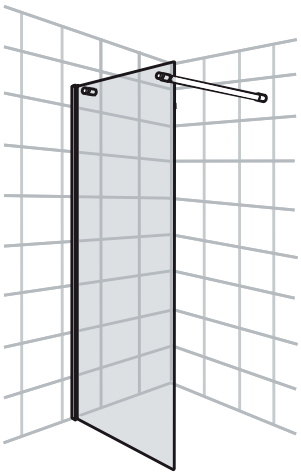

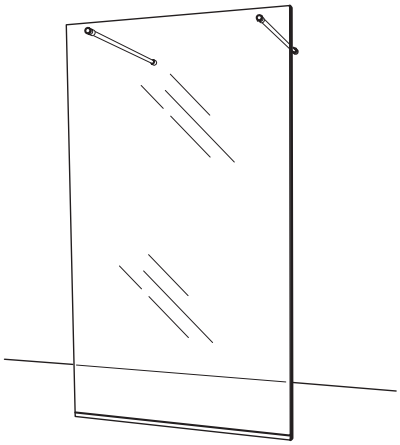

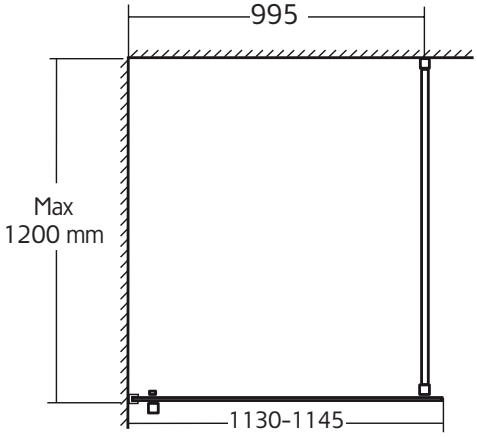

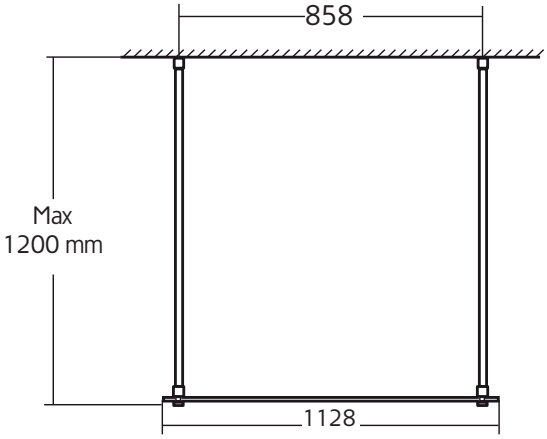

20180111

www.hafa.se